Status of the First Batch of Niobium Resonator Production for the New Delhi Booster Linac

Prakash N. Potukuchi* and Subhendu Ghosh*
Nuclear Science Centre, Aruna Asaf Ali Marg, New Delhi 110067, India
and
K.W.Shepard
Physics Division, Argonne National Laboratory, Argonne, IL 60439, USA

Abstract: This paper reports the status and details of the costs of construction of niobium superconducting resonant cavities for a linear accelerator, presently being built as a booster for the 15 UD tandem Pelletron accelerator at the Nuclear Science Centre, New Delhi. The linear accelerator will have three cryostat modules, each holding eight quarter-wave resonators. Construction of a batch of ten resonators for the linac started at Argonne National Laboratory in May 1997. For production, all fabrication and all electron beam welding is being done through commercial vendors. Details of construction and present status of the project are presented.

1. Introduction

A superconducting linear accelerator booster for the existing 15 UD tandem Pelletron accelerator [1], at the Nuclear Science Centre, is presently being constructed in collaboration with Argonne National Laboratory (ANL). A prototype quarter wave resonator (QWR) for the linac was designed, fabricated, and tested successfully at ANL [2]. The linac [3] will eventually consist of three cryostat modules each containing eight QWRs. Production of the first batch of ten resonators is presently nearing completion at ANL.

Figure 1 shows the schematic diagram of the quarter wave resonator. The resonator parameters (referenced to an accelerating gradient of 1 MV/m) are:

Resonant Frequency	97.0 MHz
Synchronous Velocity	0.08 c
Drift Tube Voltage	85 kV
Energy content	0.131 J
Peak Magnetic Field	106 G
Peak Electric Field	3.9 MV/m
Geometric Factor QRs	17.3
Active Length	15.9 cm

* Currently at the Physics Division, Argonne National Laboratory, Argonne, IL, 60439, USA

CP473, *Heavy Ion Accelerator Technology: Eighth International Conference*,
edited by Kenneth W. Shepard
1999 The American Institute of Physics 1-56396-806-1

The cavity is formed entirely of niobium and is closely jacketed in an outer vessel of stainless steel, which contains the liquid helium required to cool the superconducting structure. Where the outer stainless steel jacket joins the niobium resonator (i.e. at the beam ports, coupling ports, and the slow tuner end of the niobium housing), a flange made of explosively-bonded niobium and stainless steel is used to provide a welding transition between the two materials. Details of the design have already been presented elsewhere [2,4].

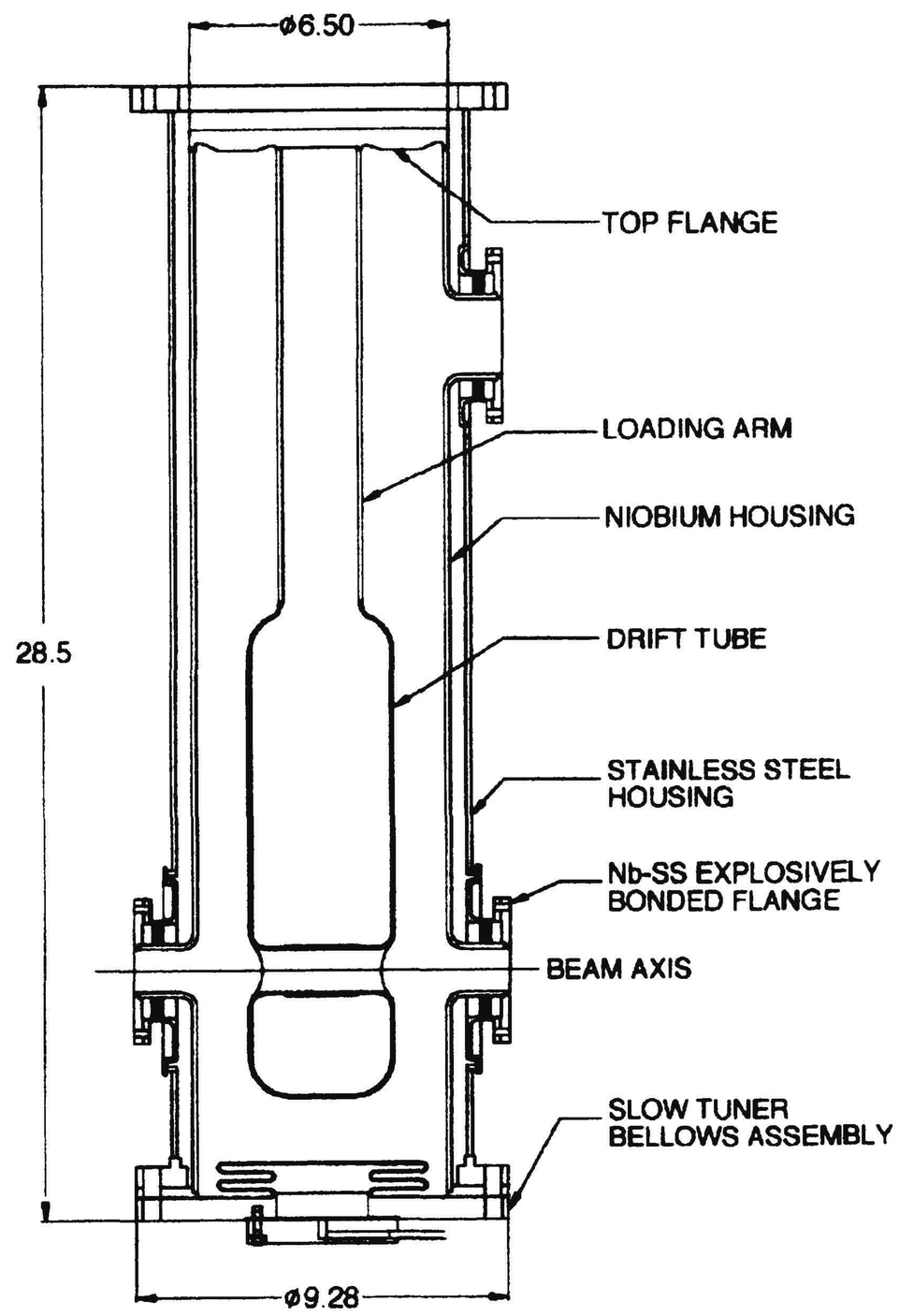

Figure 1. *Schematic diagram of the 97 MHz Quarter Wave Resonator. Dimensions are in inches.*

2. Resonator Fabrication

2.1 Mechanical Design of the Cavity

The niobium cavity parts are fabricated from both sheet metal and bar stock. Table 1 lists the various parts of the resonator, the material used, its thickness, and the various machining operations performed on them. Figure 1 shows the different parts of the cavity. There are thirty three electron beam welds per cavity, twenty one - 1/8" thick, eight - 1/16" thick, and four - 1/32" thick.

Item	Material	Rolling	Forming	Turning	Mill/Boring
Niobium Housing	Sheet, Gr-1 0.125" thk	X		X	X
Loading Arm	Sheet, RRR 0.125" thk		X	X	X
Drift Tube Cylinder	Sheet, RRR 0.062" thk	X		X	X
Coupling Port	Sheet, Gr-1 0.125" thk		X	X	
Beam Port - Housing	Bar, Gr-1		X	X	
Beam Port - Drift Tube	Bar, RRR		X	X	
C.Port Extension Tube	Sheet, Gr-1 0.125" thk		X	X	X
Drift Tube Upper/End Cap	Sheet, RRR 0.062" thk		X	X	
Seamless Tube (Drift Tube Port)	Tube, RRR			X	
Top Flange	Bar, RRR			X	
Nb-SS Transition Flange	Plate, ¼" thk Nb + ¼" thk SS			X	
Nb-SS Open End Flange	Plate, ¼" thk Nb + ¾" thk SS			X	
Nb-Cu Slow Tuner Flange	Plate, 0.062" thk Nb + ½" thk Cu			X	
Slow Tuner Bellows	Sheet, RRR 0.032" thk		X	X	

Table 1. *List of the niobium resonator parts and the various machining operations performed on them (indicated by a cross). Gr-1 is Grade-1 material, RRR is high purity and high conductivity material, and thk denotes thickness.*

2.2 Initial Development

The resonator production is being carried out in collaboration with commercial vendors in USA and India [5,6,7]. During the development of the prototype resonator most of the niobium machining, all the sheet metal work, and all the electron beam welding was performed in-house at ANL. Therefore before the production could start the technology of fabricating niobium resonators had to be transferred to the outside

vendors. Considerable amount of time and effort went into training the vendor manpower to perfect the machining and sheet metal work with niobium. Several parts were formed, initially out of copper sheets, and later out of niobium, as practice pieces. Other machining operations, e.g. turning, milling and drilling were performed to identify suitable machining parameters, tools, coolants etc. Most of the dies made during the fabrication of the prototype resonator were used for forming parts. However, additional dies were made as felt necessary. Similarly, where appropriate, additional machining fixtures were made during the development process.

A major effort went into developing the electron beam welding parameters for welding niobium of different thickness [8]. The electron beam welder is a five-axis CNC machine with a movable gun and tilt, and a large vacuum chamber of size 138" x 108" x 107". The machine is equipped with a three head-stock rotary fixture with matching tail-stocks. In order to fully exploit the capabilities of the welder, and increase productivity, the weld fixturing was designed to perform multiple welds in a single pump down.

2.3 Fabrication Details

The contract for the first batch of production calls for fabricating ten resonators. Because of increased productivity from the electron beam welding machine, resulting in a cost reduction, we are aiming to produce twelve complete resonators and most of the parts for two more.

All the niobium material was received by November '97. Chemical analysis, RRR measurements and water dunk tests were performed on niobium samples to check for its purity. The fabrication work started in December '97.

The entire machining and welding effort has been done in four major groups of tasks in the following time sequence. Highlights of the major efforts are:

1. In the first task group the niobium housings and drift tube cylinders were rolled, and the extension tubes for the coupling port saddles were formed, and welded.

2. In the second task group the loading arm, drift tube beam port assemblies, and the coupling port saddles were completed. In all 98 welds were performed in a week.

3. In the third task group the bare niobium housings were completed by welding the beam and coupling ports to the housing cylinder. Additionally the drift tubes were also completed. In all 108 welds were performed in a week.

4. Following the fabrication of the drift tubes and loading arms, they were electropolished and heat treated. These two elements were then welded together to complete the central conductor assemblies.

2.4 Present Status

At the time of presenting this paper all niobium housings complete with beam and coupling ports, the central conductor assemblies, the top and open-end flanges, the stainless steel housings, and the beam and coupling port transition flange assemblies (niobium explosively bonded to stainless steel) are ready. This amounts to a total of about 80% of the machining and sheet metal work, and about 63% of the total electron beam welding work for the production.

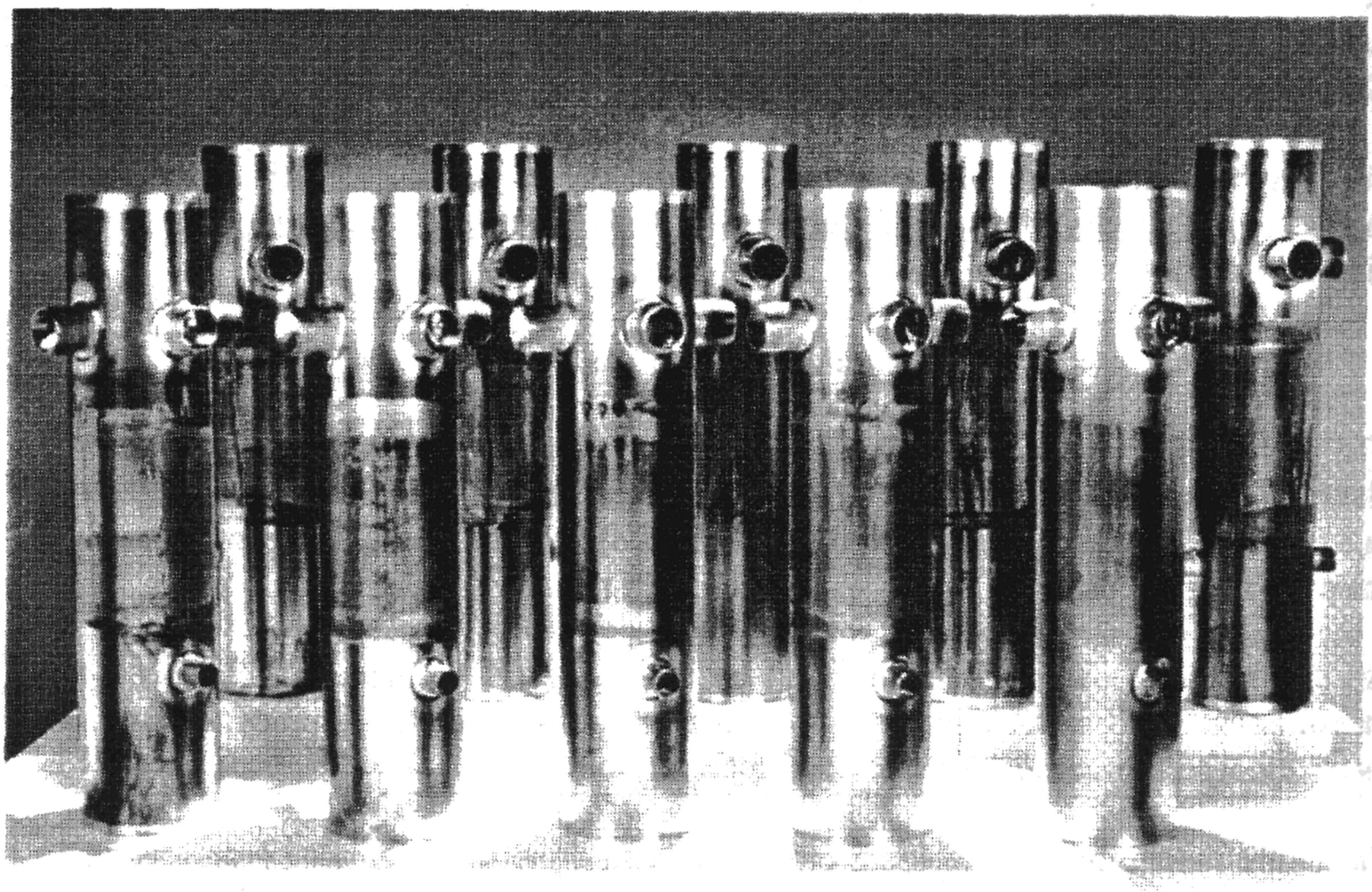

Figure 2. *Niobium Housings with the Beam & Coupling Ports*

Figures 2 and 3 show all the niobium housings and the central conductor assemblies respectively. We plan to proceed with completing initially two bare niobium resonators (without the stainless steel outer jacket), which will be dunk tested in liquid helium. They will then be jacketed in the stainless steel outer vessel for vacuum tests. After the successful testing of the resonators in vacuum the remaining resonators will be completed. The initial two resonators have been tuned to frequency and welded to the top flange. They are being prepared for the final closure weld to the niobium housing. Work on the slow tuner system will be taken up after completing the fabrication of the first two cavities.

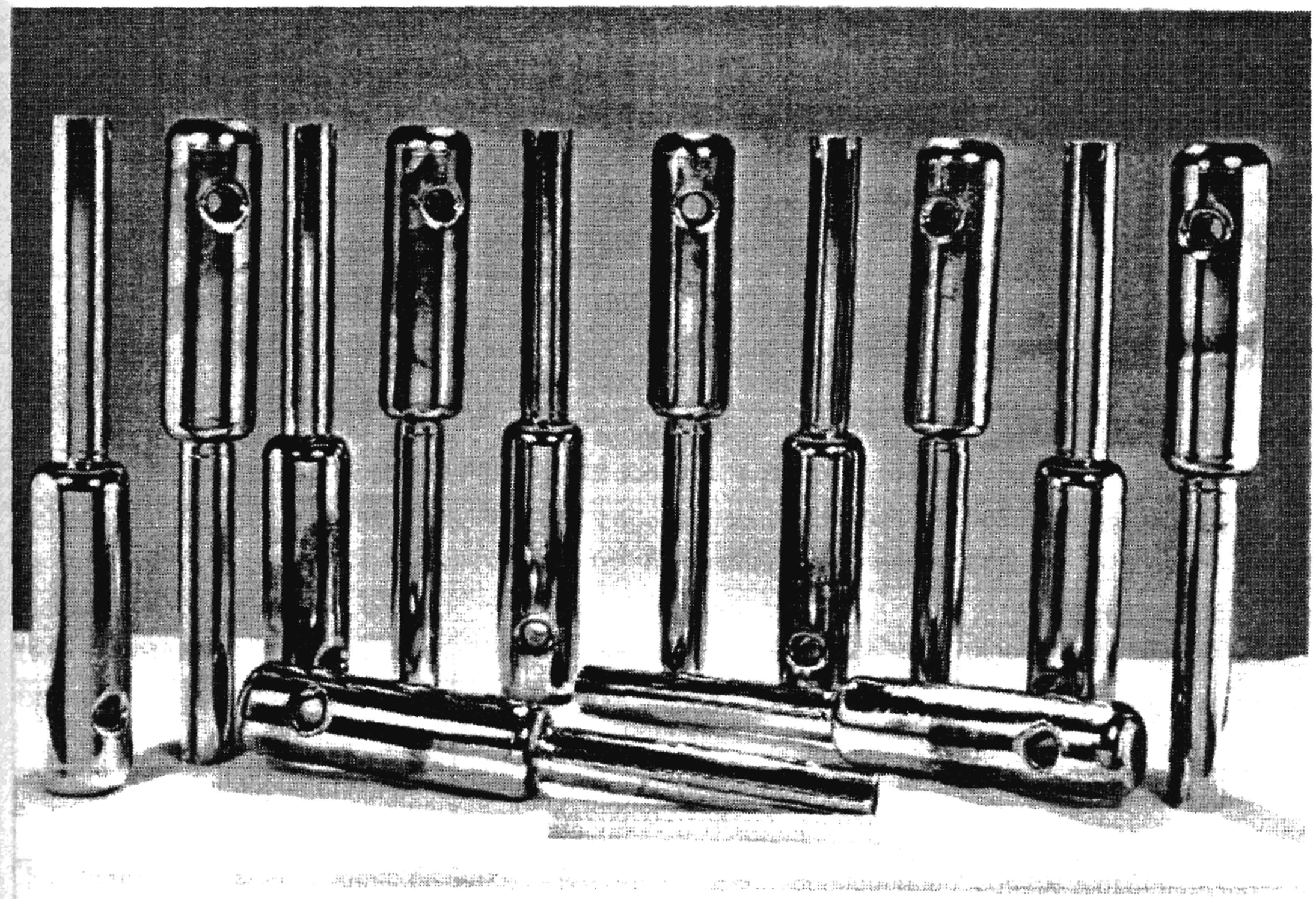

***Figure 3.** Central Conductor Assemblies*

3. Costs and Effort

The man-hours effort for the project is shown in Table 2. We have chosen to present the cost of the project in terms of the man power effort since costs may vary from laboratory to laboratory, depending upon the overheads, cost of labor, etc. Several points should be noted:

1. The total niobium material ordered is about 1100 lbs., of which 750 lbs. is Grade-1 material and 350 lbs. is RRR grade material. This includes about twenty percent allowance for contingency.

2. We are building twelve complete resonators and most of the parts for two more. We consider the scope of the present work to be equivalent to building thirteen complete resonators.

3. The effort indicated in the category "*niobium machining*" includes the machining and forming of the niobium parts, and the machining of the niobium-stainless steel explosively bonded parts.

4. The effort indicated in the category "*engineering*" shows the engineering effort of the outside vendors only.

5. We choose to present the effort in the category *"electron beam welding"* separately, since the hourly rate for performing it is about three times more than the individual rates for *niobium machining*, *engineering*, and fabricating *fixtures* (which are all about the same).

Job	Man Hours Spent on Job	Estimated Man Hours to Complete Job
Niobium Machining	2250	450
Engineering	330	70
Electron Beam Welding	210	120
Machining & Welding Fixtures	650	70
Stainless Steel jobs	750	250
Electropolishing & Heat Treatment	500	700
Technical Coordination	2000	600
Testing	0	1200
Miscellaneous	1500	500

Table 2. *Man hours effort.*

6. The effort shown in the category *"stainless steel jobs"* includes the fabrication of the outer vessel, the stainless steel top flange, and flanges for the beam and coupling port transition flange assemblies.

7. The *"electropolishing & heat treatment"* work is performed in-house at ANL. The effort shown in the category also includes cleaning and etching of the niobium parts performed prior to electron beam welding them.

8. The effort indicated in the category *"technical coordination"* is the effort put in by the authors and includes resolution of all technical problems encountered during the fabrication process, fixture designing, material testing, directing the machining, forming and beam welding developments, participation in the beam welding of the resonator components, etc. A major portion of the effort in the categories *technical coordination* and *miscellaneous* was put during the initial development work. For constructing similar number of cavities in subsequent

productions we expect the total of this effort to reduce by about half. Similarly, all the effort in fabricating machining and welding fixtures, and some portion of the effort in engineering, will also reduce.

9. The effort indicated in the category *"miscellaneous"* includes all other administrative responsibilities, travel to vendor sites, correspondence, and overall coordination.

4. Future Plans

A liquid helium dunk test of the bare niobium portion of the first two resonators is scheduled for December '98. Vacuum tests will begin afterwards and are expected to be over by March '99. The remaining resonators are expected to be fabricated by April '99. Fabrication of the slow tuner bellows will begin after completing the initial two resonators. We estimate that all the twelve resonators along with the slow tuner bellows will be ready and tested by July 1999.

Acknowledgements

The authors would like to thank Mr. Edward Bonnema and Mr. Lester Dudek of Meyer Tool and Mfg. Inc., and Mr. Radwan Mourad and Mr. Tadeusz Hejna of Sciaky Inc., for their cooperation during this work. The authors thank Mr. Rajeev Mehta and Dr. Amit Roy for their help in getting the stainless steel jackets, and the beam & coupling port transition flanges fabricated at New Delhi. Special thanks are due to Mr. Mark Kedzie for his suggestions and help in electron beam welding of the niobium parts. The authors would like to thank Prof. G.K.Mehta, Dr. Walter Henning and Dr. Jerry Nolen for their continuing support.

References

[1] D. Kanjilal et. al., Nucl. Instr. and Meth. A328, (1993), 97-100
[2] K.W. Shepard, A.Roy and P.N.Potukuchi, Proc. of the 1997 Particle Accelerator Conference, May 12-16, 1997, Vancouver, BC, Canada, p3072
[3] A.Roy et al., in this Proceedings
[4] K.W. Shepard, A.Roy and P.N.Potukuchi, Proc. of the 1993 Particle Accelerator Conference, May 17-20, 1993, Washington, DC, p1045
[5] Meyer Tool & Mfg., Inc., 4601 Southwest Hwy., Oak Lawn, IL 60453, USA
[6] Sciaky Inc., 4915 W. 67th Street, Chicago, IL 60638, USA
[7] Don Bosco Technical Institute, Okhla Road, Jamia Nagar, New Delhi, 110025, India
[8] Mark Kedzie - ATLAS, ANL, Private communication