IEEE Transactions on Magnetics, Vol. MAG-13, No. 1, January 197

TESTS OF A NIOBIUM SPLIT-RING SUPERCONDUCTING HEAVY-ION ACCELERATING STRUCTURE*

R. Benaroya, L. M. Bollinger, A. H. Jaffey, T. K. Khoe, M. C. Olesen,
C. H. Scheibelhut, K. W. Shepard, W. A. Wesolowski†

ABSTRACT

A niobium split-ring accelerating structure designed for use in the Argonne superconducting heavy-ion energy booster has been successfully tested. The superconducting resonator has a resonant frequency of 97 MHz and an optimum particle velocity $\beta = 0.11$. Ultimate performance is expected to be limited by peak surface fields, which in this structure are 4.7 E_a electric and 170 E_a (Gauss) magnetic, where E_a is the effective accelerating gradient in MV/m. RF losses in two demountable superconducting joints severely limited performance in initial tests. Following independent measurements of the rf loss properties of several types of demountable joints, one demountable joint was eliminated and the other modified. Subsequently, the resonator could be operated continuously at $E_a = 3.6$ MV/m (corresponding to an energy gain of 1.3 MeV per charge) with 10w rf input power. Maximum field level was limited by electron loading. The mechanical stability of the resonator under operating conditions is excellent: vibration induced eigenfrequency noise is less than 120 Hz peak to peak, and the radiation pressure induced frequency shift is $\Delta f/f = 1.6 \times 10^{-6} E_a^2$.

I. INTRODUCTION

This paper reports on the development of a superconducting niobium split-ring resonator designed for heavy-ion acceleration. The resonator is the prototype of units to be used in an independently-phased array that will form a small linear accelerator for increasing the energy of heavy-ion beams from the FN tandem accelerator at Argonne National Laboratory.

The split-ring geometry[1] provides a slow-wave structure particularly suited for superconducting application because of low operating frequency, low surface fields, and good mechanical rigidity. Split-ring resonators operating at 230 MHz, with a synchronous particle velocity of .07 c and utilizing lead electroplated onto copper as the superconducting material, have been demonstrated.[1,2]

In the present work, the superconducting material is niobium, the geometry is somewhat modified, and the split-ring is considerably larger than previously reported, resulting in the low resonance frequency of 97 MHz. The length of the unit is optimum for a particle velocity of 0.11 c.

Manuscript received August 17, 1976.

*Work performed under the auspices of the U.S. Energy Research and Development Administration

†Argonne National Laboratory, Argonne, Illinois 60439

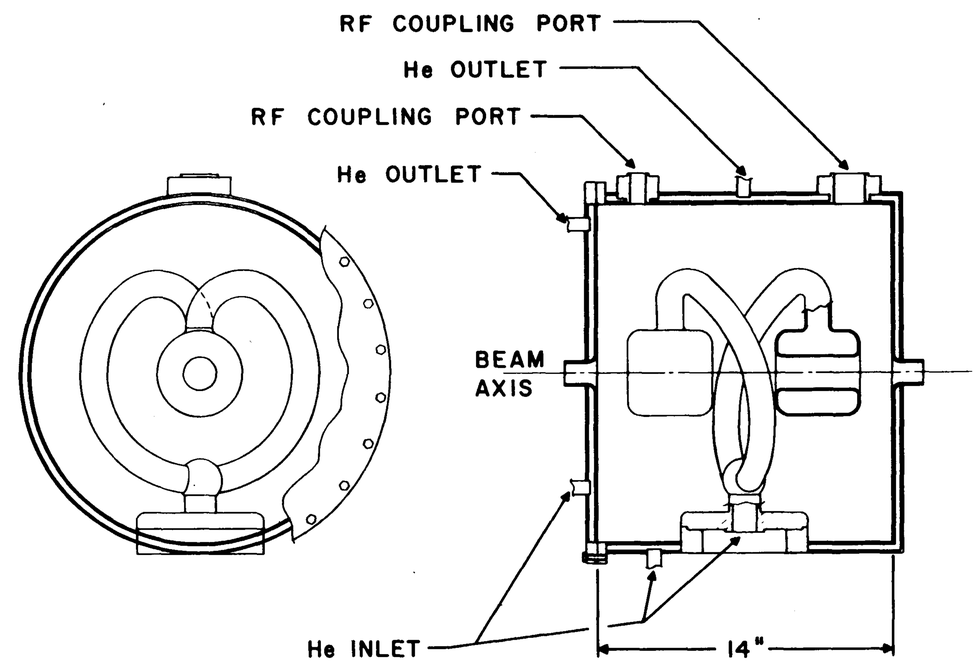

Fig. 1. The niobium split-ring resonator.

II. RESONATOR DESIGN AND CONSTRUCTION

Figure 1 shows the assembled resonator. The accelerating rf mode consists of electric charges of opposing polarity on the two drift tubes oscillating through the inductive loading ring which is connected to the housing at a voltage node.

The cylindrical housing is double-walled for circulation of liquid helium, which allows the cryostat and beam-line vacuum systems to be combined. This arrangement also simplifies electrical connections to the resonator. The drift tubes are hollow, to allow for cooling, and are vented through teflon tubes inserted from the base of the split ring.

In the initial fabrication, both the split-ring element and one end of the cylindrical housing were made demountable in order to facilitate heat treatment and chemical processing. As discussed below, the split-ring element was later welded into place.

Electrodynamic Properties

The characteristics of the accelerating rf mode are: $f_o = 96.7$ MHz, $QR_s = 16$, $\beta_o = 0.105$, where f_o is the resonant frequency, QR_s the geometric factor, and β_o the synchronous particle velocity normalized to the velocity of light.

Let the axial accelerating field E_a be defined as energy gain per unit charge divided by resonator length (for a synchronous particle). Then, when $E_a = 1$ MV/m, in our resonator $E_m = 4.8$ MV/m, $B_m = 176$ Gauss, and $U_o = 0.17$ Joules, where E_m, B_m are the maximum surface electric and magnetic field and U_o the rf energy content of the resonator.

The radial size of the resonator was minimized by folding the arms of the split ring

radially inward so that the drift tubes and beam axis are coaxial with the cylindrical housing. This was done at the expense of increasing the peak surface magnetic field by ~ 40% at the interior of the short radius bend required by the fold. Past experience[3] with superconducting niobium helical resonators indicates this increase to be tolerable, since the field level of the split-ring resonator is expected to be limited by electron loading.

In addition to the accelerating push-pull mode of interest, the resonator has a push-push mode in which the rf voltage has the same polarity on the two drift tubes. To avoid the possibility of mode mixing, the eigenfrequency of the two modes should be well separated. Tests on a copper model demonstrated that this is easily done by correctly choosing the length of the supporting tube that attaches the split ring to the housing. In our design, the eigenfrequency of the unwanted mode is 107.4 MHz.

Construction of the Resonator

The resonator was constructed entirely of high-purity niobium[††], primarily in the form of rolled sheet, from which various pieces were shaped by standard sheet-metal working techniques and then welded together.

Some 70 separate welds were required. All welds on the split-ring element and about half the welds on the housing were electron-beam welds, the remainder being TIG welds made in an inert-gas hood.

The outer wall of the housing was dimpled inward and welded to the inside wall at a number of points to increase mechanical rigidity. Both walls were of 1/16" material except for the inner wall of the cylindrical part, which was 1/8" sheet.

III. TESTS AND DEVELOPMENT

Experimental Procedures

Prior to initial tests, the split ring element, but not the housing, was annealed for 8 hours at 1250°C. All components were then electropolished, oxypolished, and assembled in a dust-free environment.

The resonator was tested in a cryostat which provides a vacuum of typically 4×10^{-6} Torr before cooldown. The pressure drops rapidly to 2×10^{-7} Torr when liquid nitrogen is fed to the radiation shield. And finally, the pressure drops to ~ 3×10^{-8} Torr in the region between the resonator and radiation shield when the resonator is cooled to helium temperature.

The resonator was tested at both 1.8°K and 4.2°K.

Initial Results

The first cooldown of the resonator was interrupted at a temperature less than 77°K by a failure of two welds in the housing. Following repair of the welds, the housing was annealed for stress relief at 820°C for 30 minutes.

The resonator was then oxypolished, reassembled, and successfully cooled to liquid-helium temperatures. The initial operation of the resonator gave the poor results shown by curve A of Fig. 2. Continuous operation was limited to $E_a < 0.6$ MV/m. Higher fields were reached by pulsed operation.

In the 107 MHz push-push mode the rf current through the demountable joint between the split ring and housing is ~ 3 times greater than in the accelerating mode. The Q for this eigenmode was a factor of 10-15 lower than for the accelerating mode, indicating that rf losses in the demountable joint were the dominant rf loss mechanism.

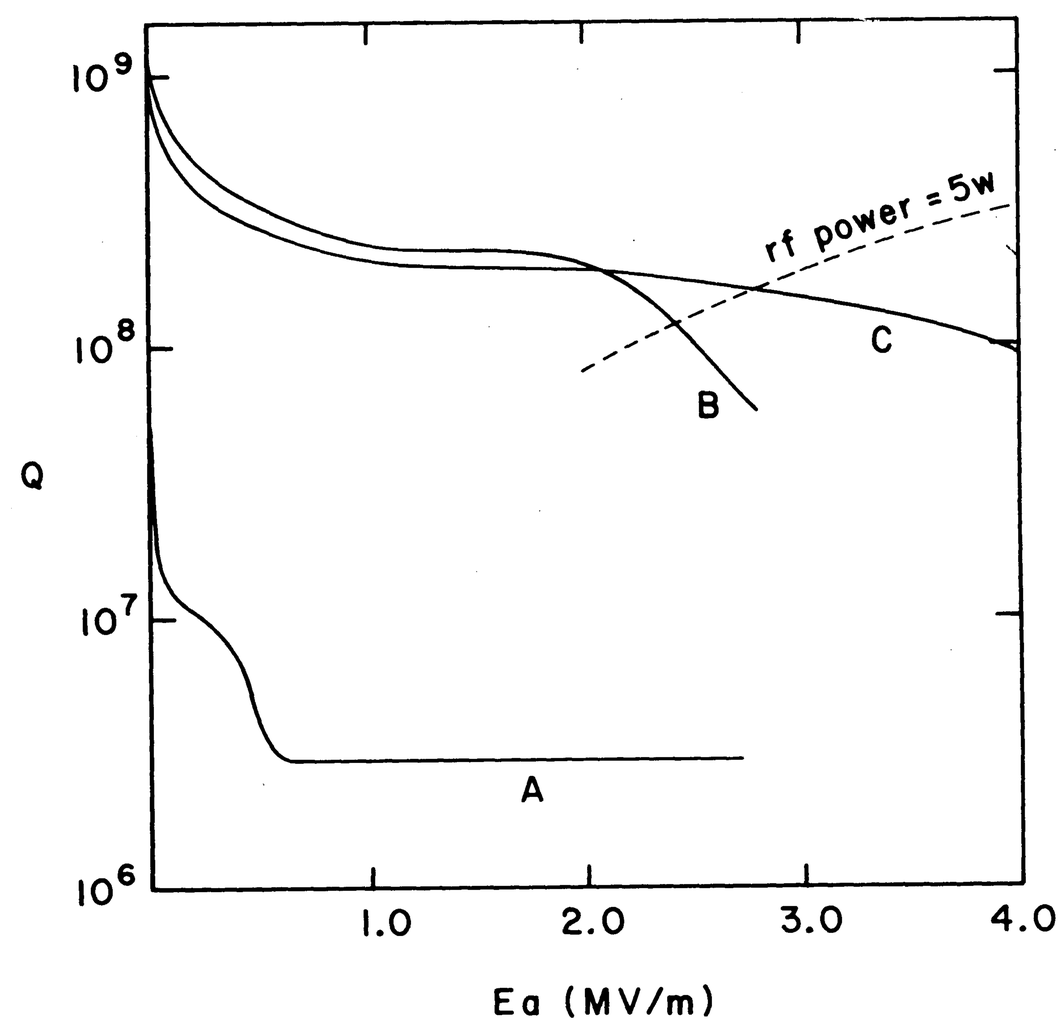

Fig. 2. High-field performance of the resonator. Curve A was obtained at 1.9°K with the split ring demountably joined to the housing. Curves B and C were obtained with the split ring welded to the housing, B at 1.9°K prior to He conditioning, C at 4.2°K after He conditioning.

Initially, the joint consisted of a knife edge of 60° included angle on one flange pressed into the plane surface of the mating flange. Replacing this joint with an indium gasket resulted in even poorer performance, as shown in Fig. 3. Consequently, we entered into a program of testing rf joints.

Tests of Demountable Joints

Measurements of the rf-loss properties of several types of demountable joints were made with a superconducting niobium resonator designed to couple strongly to a demountable joint and to be rapidly recyclable. The resonator is a 4" O.D. quarter-wave coaxial line, resonant at 190 MHz, with a demountable joint at the shorted end. Details of this

[††] Stanford grade, except Ta impurity <360 ppm.

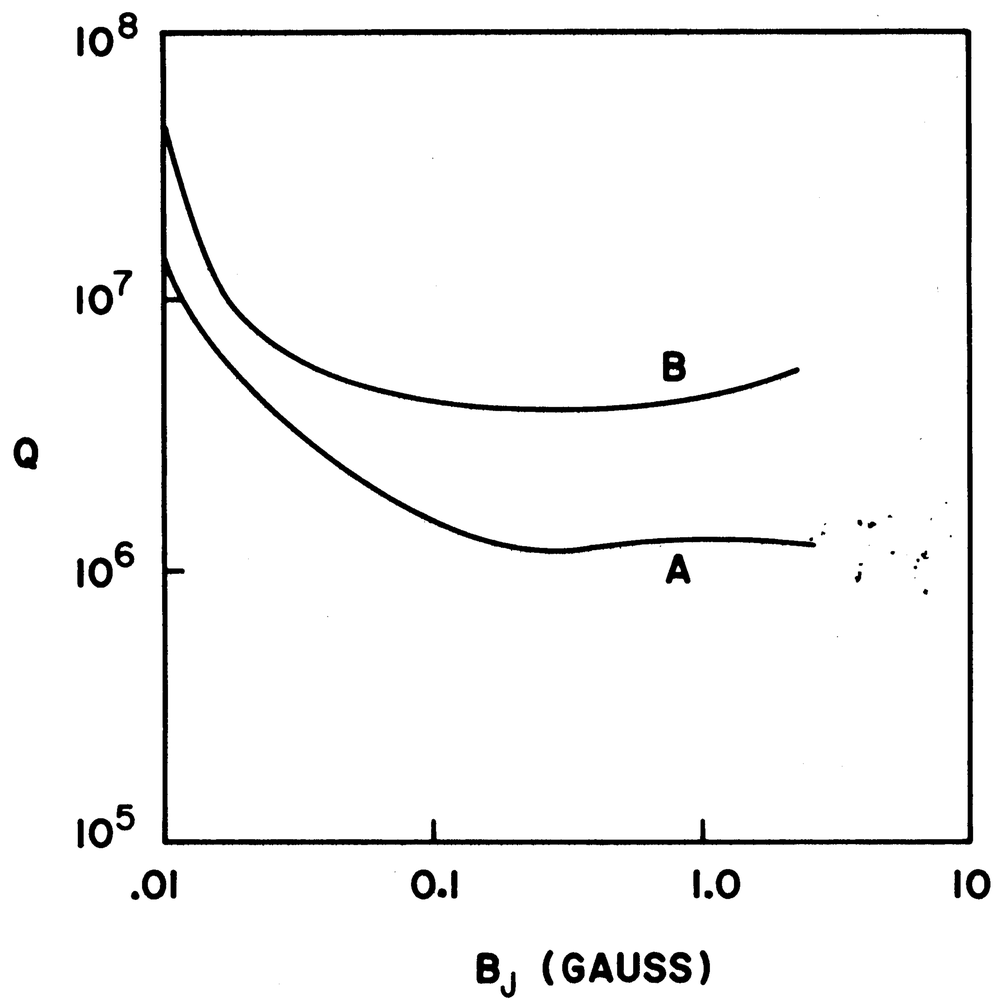

Fig. 3. Resonator Q at 1.9° K as a function of the rf magnetic field at an indium gasket demountable joint. Curve A was measured directly in the split-ring resonator, curve B was inferred for the split-ring resonator from data obtained with the coaxial-line resonator. (at E_a = 1 MV/m, B_J = 40G)

study will be reported elsewhere[4]; however, several results are needed here.

As a check on this method of evaluation, the rf losses of an indium gasket were measured in the coaxial-line resonator, and these data were used to estimate the losses expected for a similar joint in the split-ring resonator. Curve B of Fig. 3 gives the result, obtained under the assumption that the rf-power loss depends only on the current through the joint, and is independent of the rf frequency. The coaxial-line resonator measurements are in reasonable agreement with the observed behavior (curve A in Fig. 3) of the split-ring resonator.

Since the indium joining technique did not appear promising, a series of tests of Nb-Nb pressed contacts was performed. Joints using a gasket of 1/32 inch diameter Nb wire exhibited rf losses from ten to three hundred times smaller than for the Indium gasket. However, joints prepared under apparently identical conditions varied by more than a factor of ten in rf losses.

None of the gaskets tested performed adequately for joining the split-ring and housing. The Nb-Nb pressed contacts so far tested would limit the Q of the split ring to a range $10^7 < Q < 10^8$ at useful accelerating field levels. Thus, it was decided to eliminate this demountable joint by EB welding the split-ring element to the housing.

The demountable joint at the end plate, however, was retained. The rf-current density at this joint is small enough (3.5 Gauss at E_a = 1 MV/m) that the losses here are expected to limit the Q of the resonator to the range $3 \times 10^8 \leq Q \leq 3 \times 10^9$.

High Field Performance and Mechanical Properties

After welding the split ring to the housing and using a Nb-wire gasket at the end-plate joint, the performance of the resonator improved greatly. Curves B and C of Fig. 2 give results obtained under two sets of conditions.

Multipacting was encountered nearly continuously over the range of field levels $.03 < E_a < .6$ MV/m, but it disappeared after about 30 min of rf conditioning.

Initially, electron loading, evidenced by x-ray emission and a decrease in Q, was observed (curve B) at field levels $E_a \gtrsim 2$ MV/m. Helium conditioning[3,5] of the resonator surface reduced electron-loading, as shown in curve C of Fig. 2. The resonator could be operated continuously at E_a = 3.6 MV/m, and intermittently up to 4.0 MV/m.

The mechanical stability of the split ring is excellent. The eigenfrequency shift induced by radiation pressure is only 620 Hz at E_a = 2 MV/m, which is small enough to effectively eliminate the problem of electromechanical coupling. With vibration isolation, the vibration-induced eigenfrequency noise is less than 120 Hz peak to peak. A minor problem still to be eliminated is the fact that the eigenfrequency depends somewhat on the pressure of the helium inside the double-walled housing; a pressure change of 1 mm causes a frequency shift of 80 Hz, believed due to flexure of the end covers.

IV. CONCLUSIONS

The results obtained to date indicate that the split-ring resonator made of niobium is well suited for use as the accelerating structure in a heavy-ion linac. The unit tested, by itself, provides an effective accelerating potential of more than 10^6 volts with a power dissipation of 5 W into a 4.2° bath, a quality of performance that is attractive for an accelerator.

On the basis of the high field performance obtained[3] at similar frequencies with helix resonators made of niobium, there is every reason to believe that the performance of the split-ring resonator can be substantially better than we have demonstrated to date. In particular, it is probable that the Q of the system can be greatly increased by improving the rf contact to the end plate. The development of a good contact is well advanced. Other developmental work is aimed at the production of a simple, rugged, and inexpensive resonator housing by means of a design that eliminated most of the welding, which has been a source of trouble in the unit described here.

ACKNOWLEDGEMENTS

The authors thank R. P. Breuss and L. J. Gagola of the Argonne Central Shops Facility for their assistance in construction of the resonator, and P. Markovich of the Argonne Chemistry Division for performing the chemical processing.

REFERENCES

1. K. W. Shepard, J. E. Mercereau, and G. J. Dick, IEEE Trans. Nucl. Sci. NS-22, 1179 (1975).

2. G. J. Dick and G. D. Sprouse, Proceedings of this conference.

3. R. Benaroya, B. E. Clifft, K. W. Johnson, P. Markovich, W. A. Wesolowski, IEEE Trans. Mag., MAG-11, 413 (1975).

4. K. W. Shepard and M. C. Olesen, to be published.

5. H. A. Schwettman, J. P. Turneaure and R. F. Waites, J. Appl. Phys. 45, 914 (1974).